Indian Institute of Technology, Mandi

Lab Sheet-1

Course name: Foundations of Design Practicum

Course code: IC102P

Title: Sketching and modelling of 2D and 3D components of a wheeled robot's parts.

Part 1: Sketching of the upper chassis of the wheel robot by taking reference from the image below.

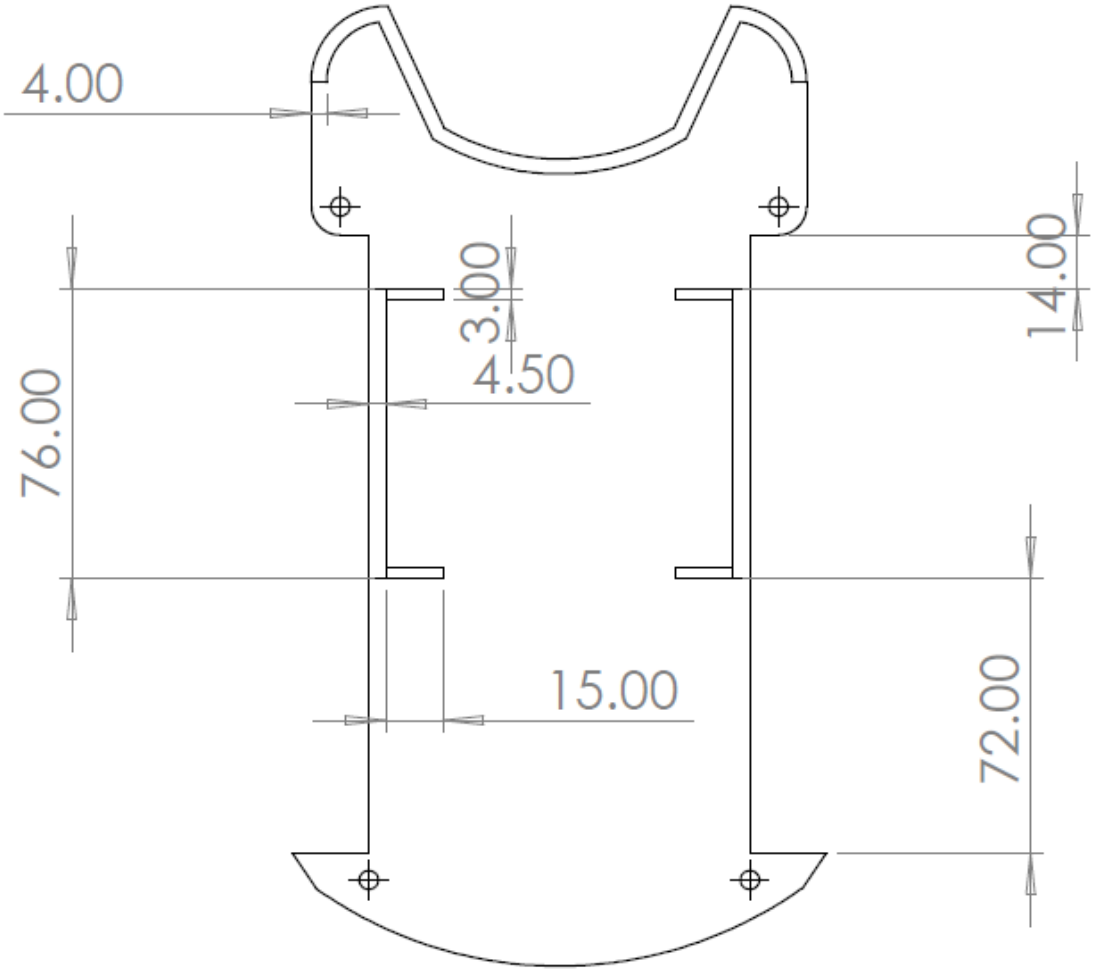

Figure 1: Top view of upper chassis.

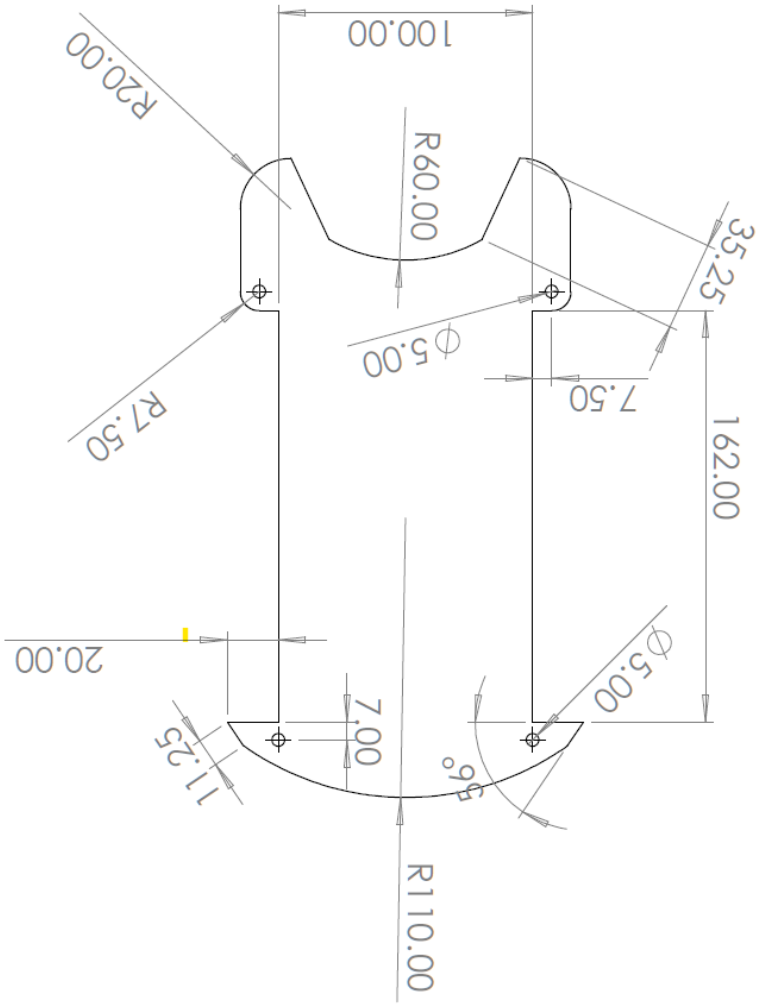

Figure 2: Bottom view of upper chassis.

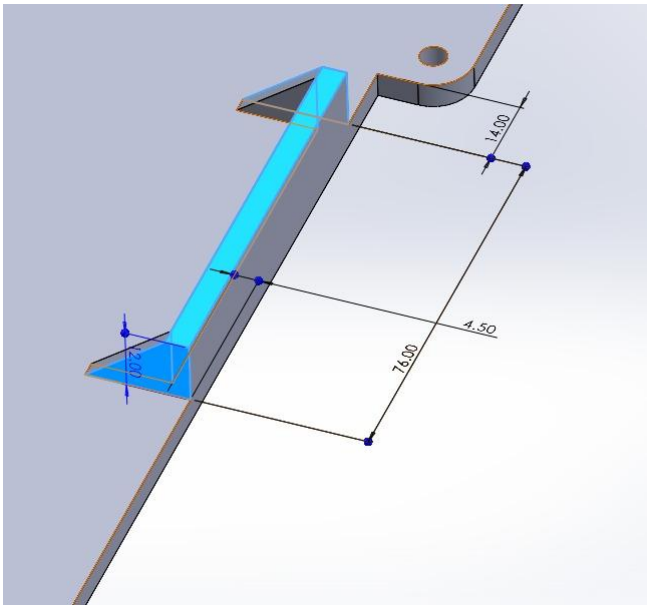

Figure 3: Other reference dimension.

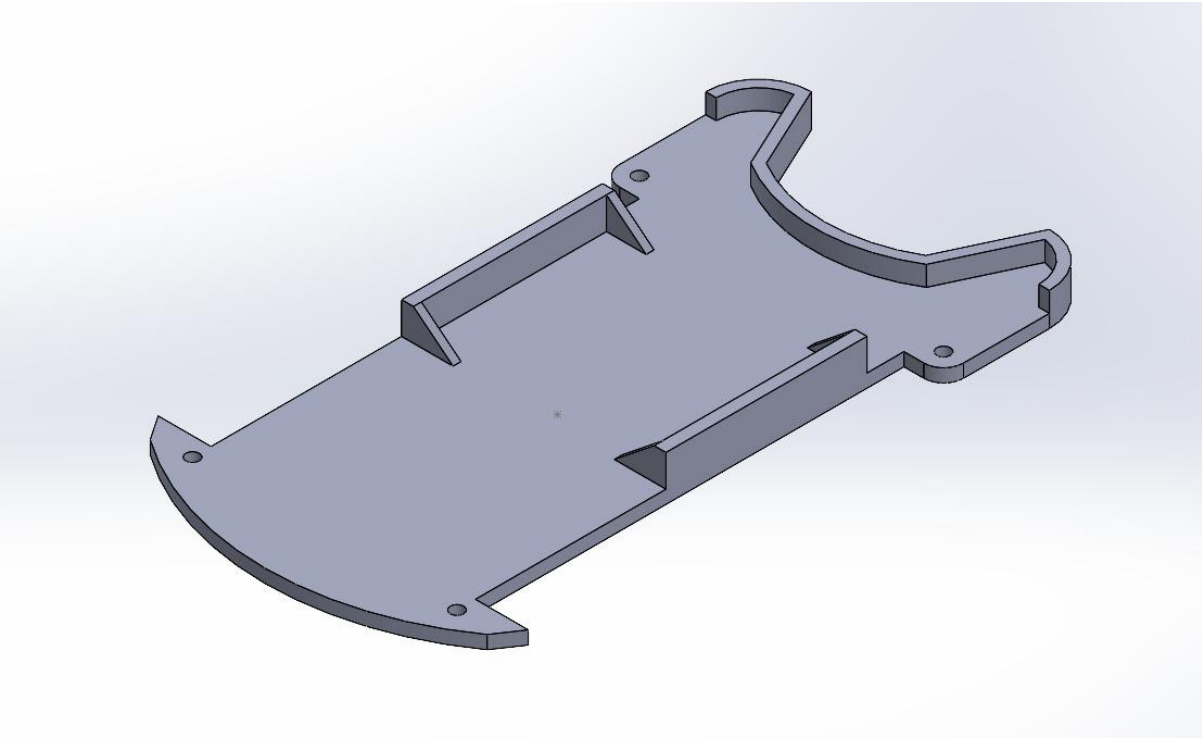

Figure 4: Upper chassis 3D part of the wheeled robot.

Part 2: Sketching of the lower chassis of the wheel robot by taking reference from the image below.

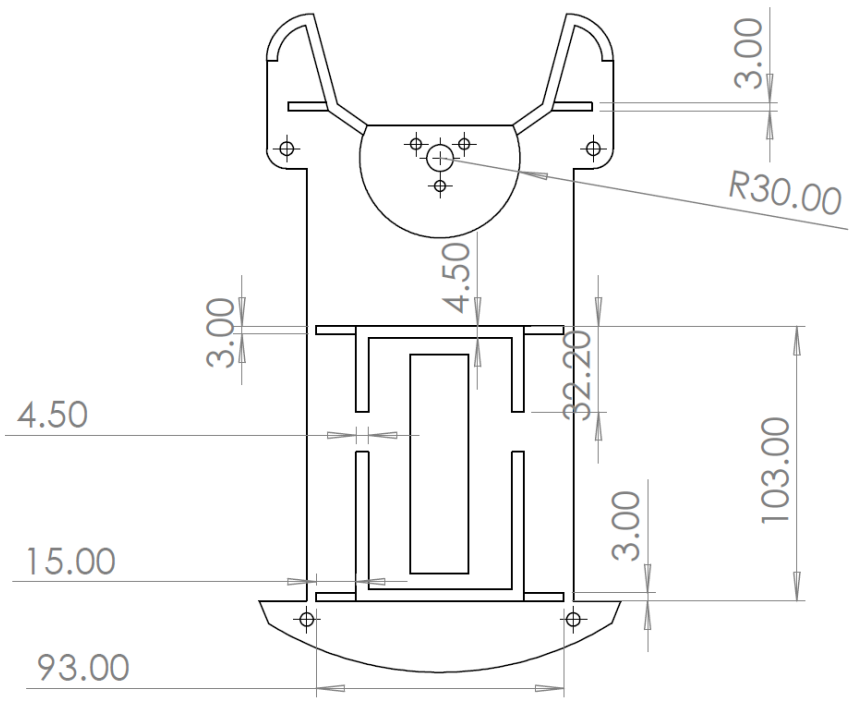

Figure 5: Top view of lower chassis.

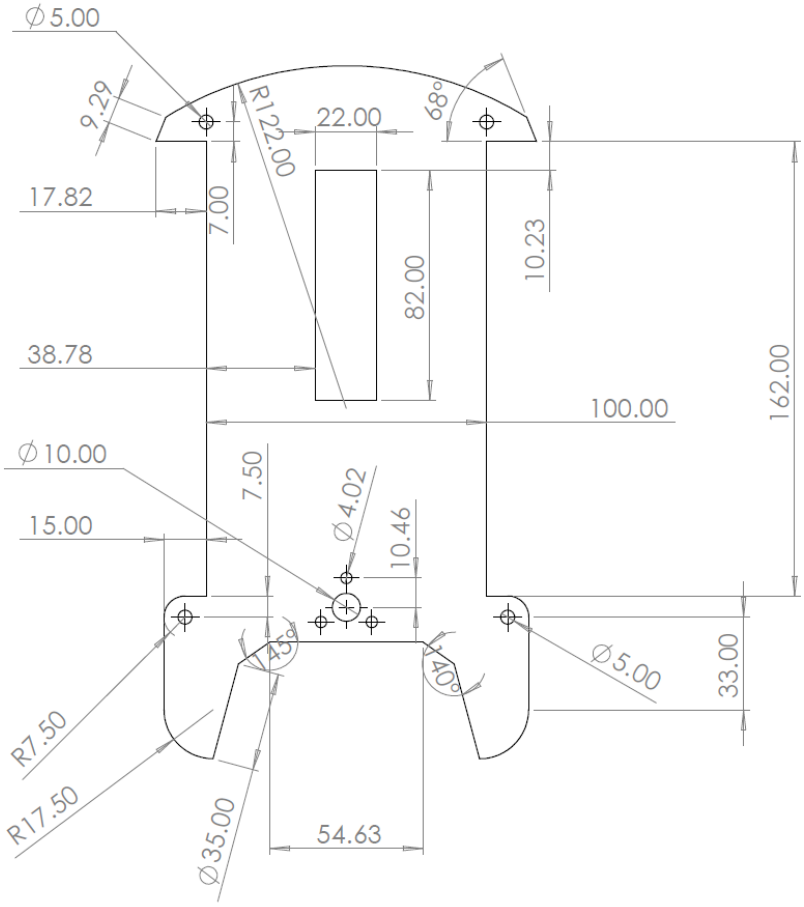

Figure 6: Bottom view of lower chassis.

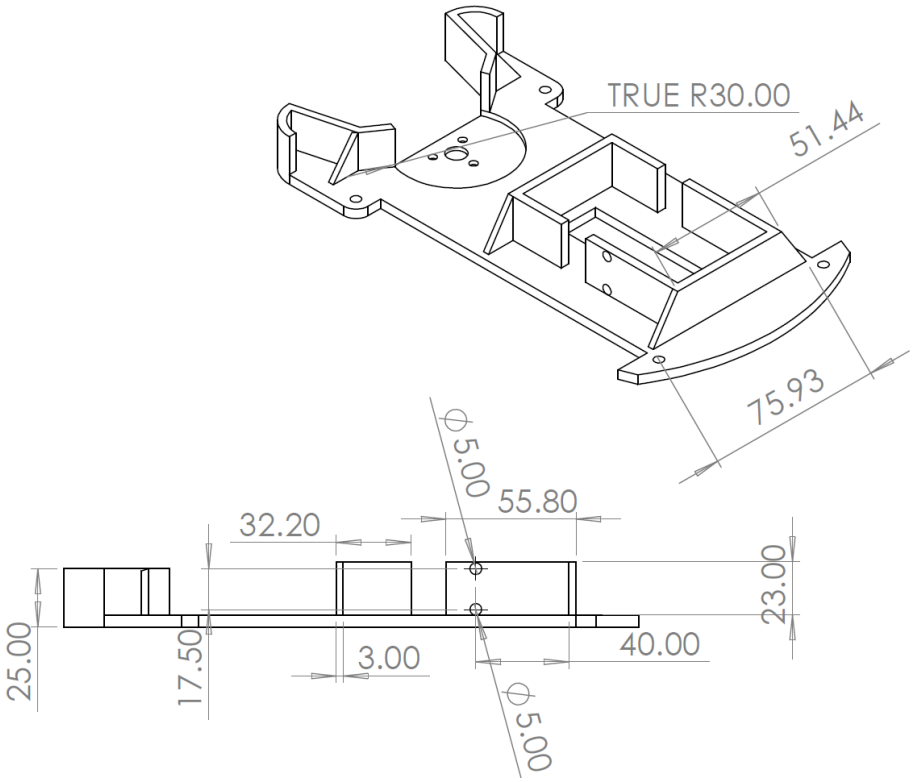

Figure 7: Side view of lower chassis.

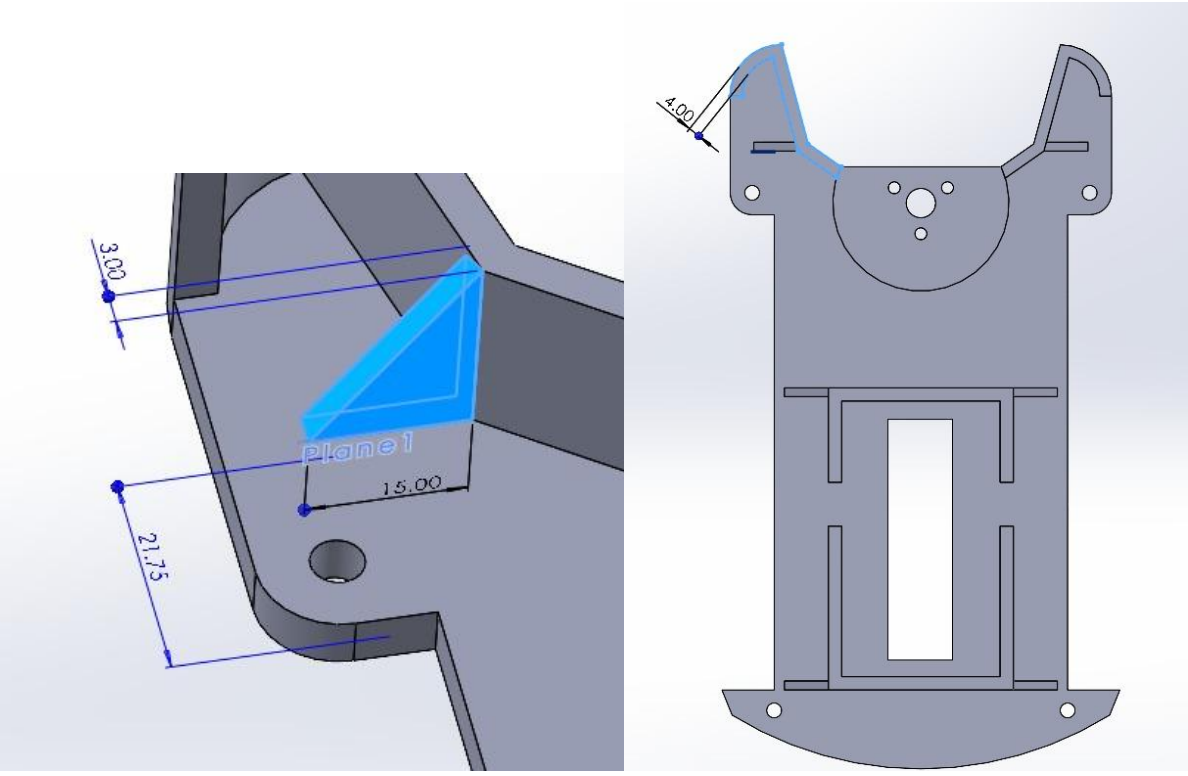

Figure 8: Other reference dimension.

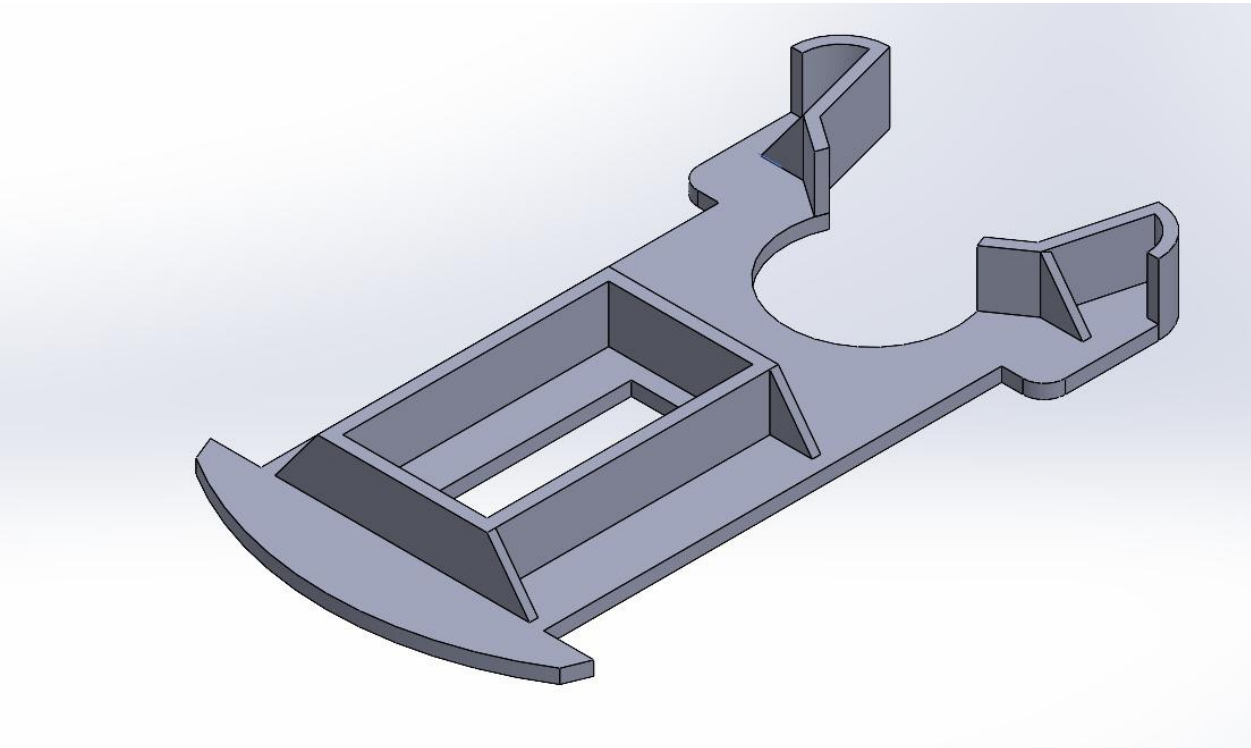

Figure 9: Lower chassis 3D part of the wheeled robot.

Part 3: Support columns

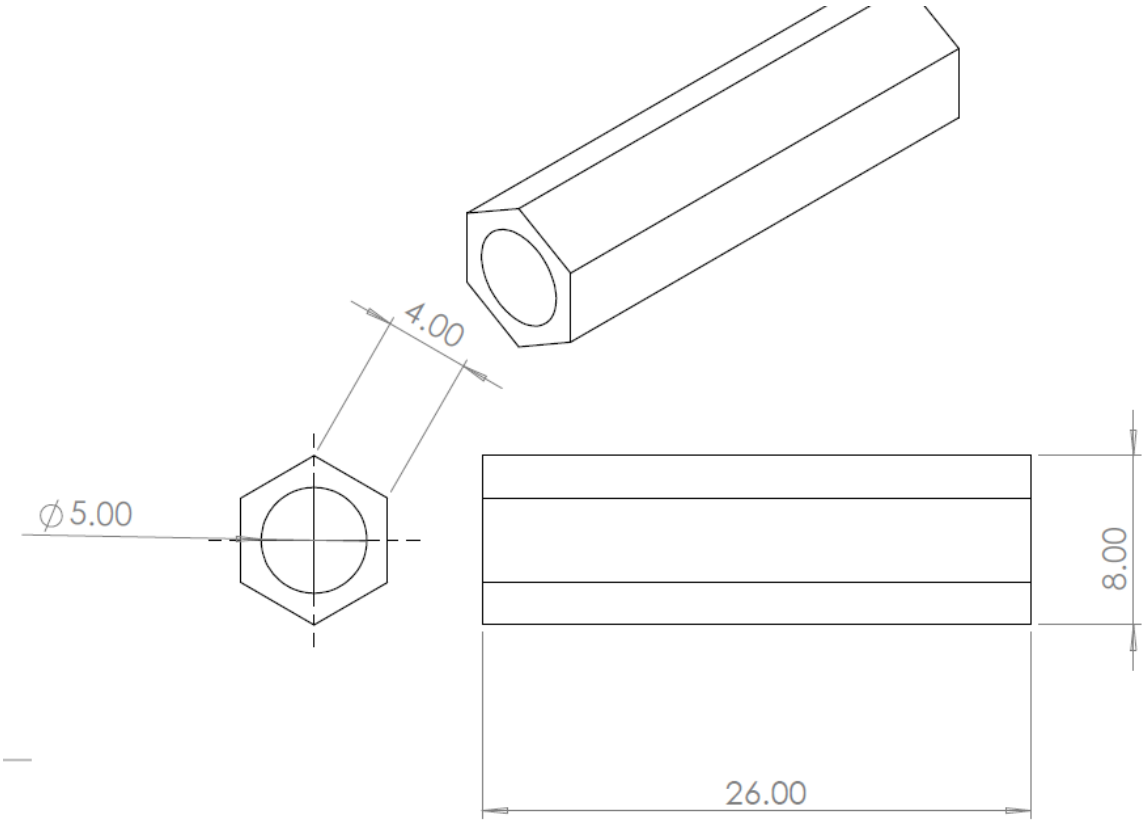

Figure 10: Support columns dimension.